WESTEN

The smart choice for your home comfort

novadens

novadens boyler

SPARE PARTS CATALOGUE

- November 2008 -

HOW TO READ THE SPARE PARTS CATALOGUE

In the spare part catalogue, after the exploded diagrams, there are the components lists of the boilers; this is the meaning of the different columns:

Pos.	Identification number of the component in the exploded diagram of the boiler.
Description	Short description of the component.
Code	BAXI S.p.A. code of the component.
Tab. XX	XX is the exploded diagram number of the boiler taken into consideration.
From serial number	Date (year and week) identifying the beginning of production of a component (taken from the serial number of the boiler). e.g. B005: year 2000 (B identifies the decade 2000-2009; 0 identifies the year) – 5th week. If the box is empty, the component is in use from the beginning of production of the boiler.
To serial number	Date (year and week) identifying the end of production of a component (taken from the serial number of the boiler). e.g. B012: year 2000 (B identifies the decade 2000-2009; 0 identifies the year) – 12th week. If the box is empty, the component is still in use.
Interchangeable	It identifies the interchangeability between the new component and the old one. YES: components are interchangeable. NO: components are not interchangeable.

BOILERS CONNECTION BOARD - EXPLODED VIEW
TABELLA COLLEGAMENTO CODICE CALDAIA - ESPLOSO
TABLERO UNIÓN CALDERA - EXPLOSIONADO
TABLEAU CONNECTION CODEX CHAUDIERE - VUE ECLATEE

BOILER CODE CODICE CALDAIA CODIGO CALDERA CODE CHAUDIÈRE	BOILER DESCRIPTION DESCRIZIONE CALDAIA DESCRIPCION CALDERA DESCRIPTION CHAUDIÈRE	EXPLODED REF. RIF. ESPLOSO REF. EXPLOSIONADO RÉF. EXPLOSÉE
HLH435243970	NOVADENS 1.240	Tab 363
HLH436243970	NOVADENS 240	Tab 336
HLH436283970	NOVADENS 280 WESTEN	Tab 278
HLH436283971	NOVADENS 280 WESTEN	Tab 278
HLH436283972	NOVADENS 280 WESTEN	Tab 336
HYH437243970	NOVADENS BOYLER 240	Tab 364

10/11/2008

novadens

Pos	Code	Description code	HLH43524397 0 1.240	HLH43624397 0 240	HLH43628397 0 280	HLH43628397 1 280	HLH43628397 2 280	HYH43724397 0 BOYLER 240					To serial number	From serial number	Interchangeable:
1	5106510	REAR SUPPORT						●							
2	5116220	LEFT PANEL HT	●	●	●	●	●								
2	5663160	LEFT PANEL ASSEMBLY						●							
3	5116210	RIGHT PANEL HT	●	●	●	●	●								
3	5663140	RIGHT PANEL ASSEMBLY FF						●							
4	5116690	FRONTAL PANEL WESTEN FF T5XI	●	●	●	●	●								
4	5686140	FRONTAL PANEL ASS.						●							
5	5114030	UPPER BAR NUVOLA HT330						●							
6	5106550	VALVE SUPPORT RAIL						●							
7	5107950	OUTERCASE BRACKET						●							
8	5408080	PRESSURE SWITCH PIPE L=270	●	●											
8	5410080	SILICONE PIPE D.8 L=800						●							
8	5410790	PYPE			●	●	●								
10	5409020	FLUE ADAPTOR HE	●	●	●	●	●								
10	5409990	FLUE CONNECTION 60/100						●							
11	5409010	GASKET ADAPTOR	●	●	●	●	●	●							
12	5108690	PLATE BLANKING	●	●	●	●	●	●							
13	5407400	SUCTION CAP GASKET	●	●	●	●	●	●							
18	5663490	PRESSURE SENSING VENTURI	●	●	●	●	●	●							
21	5402050	WASHER-SEALING	●	●	●	●	●	●							
22	5691840	FAN RG128/UB 230V-55667.11925-	●	●	●	●	●	●							
26	5114000	LEFT SIDE PANEL SEALED CHAMBER						●							
27	5113990	SEALED CHAMBER RARE SIDE						●							
27	5114120	COMBUSTION CHAMBER ACCUMUL						●							
27	5116590	SEALED CHAMBER REAR PANEL	●	●	●	●	●								
29	5410450	REAR INSULATION						●							
29	5412010	CERAMIC PANEL BASIC	●	●	●	●	●								
30	5409100	CERAMIC PANEL						●							
30	5411020	INSULATION PANEL	●	●	●	●	●								
32	5664270	EXCHANGER 4 EL.						●							
32	5671940	HEAT EXCHANGER BASIC 4E		●											
32	5671950	HEAT EXCHANGER	●		●	●	●								
33	5403130	O-RING 22 x 3	●	●	●	●	●	●							
34	5113650	PRIMARY EXCHANGER FIXING CLIP						●							
34	8380860	FIXING CLIP	●	●	●	●	●								
35	5629130	EXPANSION VESSEL 7,5 L.						●							
35	5662620	EXPANSION VESSEL 8L	●	●	●	●	●								
37	5689640	COMB CHAMBER FRONTAL PANEL	●	●	●	●	●								
37	5689680	FRONTAL PANEL ASS NUVOLA HT						●							
38	5401610	VIEWING WINDOW GASKET	●	●	●	●	●	●							
39	5203930	VIEWING WINDOW	●	●	●	●	●	●							
40	5103360	SURROUND - VIEWING WINDOW			●	●	●	●							
40	5115590	SURROUND-SIGHT GLASS	●	●											

novadens

Pos	Code	Description code	HLH43524397 0 1.240	HLH43624397 0 240	HLH43628397 0 280	HLH43628397 1 280	HLH43628397 2 280	HYH43724397 0 BOYLER 240					To serial number	From serial number	Interchangeable:
41	5663250	4 ELEM. BURNER LUNA HT 1.120						●							
41	5672000	BURNER 4E BASIC		●											
41	5672010	BURNER	●		●	●	●								
46	5666540	GAS BURNER PIPE ASSEMBLY						●							
46	5672030	GAS PIPE ASSY	●	●	●	●	●								
48	5412170	REDUCTION 80/60	●	●	●	●	●								
49	5409280	TAP ADAPTOR	●	●	●	●	●	●							
59	8510970	IGNITION ELECTRODE CABLE						●							
59	8513520	LEAD - IGNITION	●	●	●	●	●								
63	8422830	ELECTRODE - IGNITION	●	●	●	●	●	●							
65	8422840	ELECTRODE - IONISATION	●	●	●	●	●	●							
70	5666530	PIPE ASSEMBLY						●							
70	5672040	RETURN PIPE ASSY	●	●	●	●	●								
72	5655620	PUMP UP 15-60 AO (GRUNDFOS)	●	●	●	●	●	●							
73	607290	AUTOMATIC AIR VENT	●	●	●	●	●	●							
74	5406360	O-RING 14X1,78 EP	●	●	●	●	●								
75	5409240	GROMMET - PIPE ASSY D.10	●	●	●	●	●	●							
76	5686680	DHW PLATE EXCHANGER 14 PLATE		●											
76	5689930	EXCHANGER 20 PLATE TO PLATE			●	●	●								
77	5404520	DHW PLATE EXCHANGER GASKET		●	●	●	●								
78	5668540	INS. BOILER ASSEMBLY D.270						●							
79	9950620	HYDRAULIC SAFETY VALVE 8 BAR						●							
80	5655650	HYDRAULIC INLET ASSY	●												
80	5666600	SANITARY INLET CONNECTOR ASS.						●							
80	5671530	HALL SENS. GROUP 8L WITH TAP			●	●									
80	5696230	DHW INLET/HEAT.RET.HALL EF 8L		●			●								
81	617060	FILTER RESTRICTOR GROUP 8L		●	●	●	●								
83	5620090	FLOW RATE LIMITATOR - 12 L/MIN						●							
83	5666110	RESTRICTOR			●	●									
87	5210710	PUMP CONNECTING ELEMENT		●	●	●	●								
90	611930	FILLING GROUP		●	●	●	●								
90	5622840	FILLING TAP MM G 3/8						●							
91	5652030	DRAINING TAP	●	●	●	●	●	●							
92	9950600	SAFETY VALVE 3 BAR						●							
92	9951170	SAFETY VALVE 3 BAR	●	●	●	●	●								
95	5668740	TAP/ANODE ASSEMBLY						●							
96	5668550	COIL PIPE ASS./HR PUMP						●							
98	5212040	PIPE (HEATING SYSTEM-BY PASS)						●							
98	5212890	BY PASS PIPE ASSY			●	●									
98	5672770	BY-PASS PIPE ASSEMBLY	●												
99	8380850	FIXING CLIP	●		●	●									
102	5663040	3 PORT VALVE ASSEMBLY						●							

novadens

Pos	Code	Description code	HLH43524370 1.240	HLH43624370 240	HLH43628370 280	HLH43628371 280	HLH43628372 280	HYH43724370 BOYLER 240					To serial number	From serial number	Interchangeable:
102	5671520	V3V GROUP -15.0431-			●										
102	5683540	3 WAY VALVE/MB GROUP LUNA3	●												
102	5687140	MR-US ASSEM LUNA3 15.0633				●									
102	5696040	3 WAY VALVE ASS.W.OUT BY-PASS		●			●								
104	5668570	SANITARY OUTLET PIPE						●							
109	5207810	GASKET 10 X 14 X 1.5						●							
113	617100	BY-PASS GR.	●		●	●									
114	5403820	O-RING 26,64 X 2,62						●							
119	605760	HYDRAULIC VENTURI ASSEMBLY	●		●	●		●							
120	600750	SPACER ASSEMBLY	●		●	●									
120	626710	DHW PADDLE GROUP -10.0355-		●			●								
122	5405370	O-RING		●	●	●	●	●							
131	8435400	NTC SENSOR	●	●	●	●	●	●							
132	5402830	WASHER - SENSOR SEALING	●	●	●	●	●	●							
134	5212140	INJECTOR	●	●	●	●	●	●							
135	9950760	THERMOSTAT - LIMIT	●	●	●	●	●	●							
136	5672050	PIPE			●										
136	5681400	PIPE ASS.(3 WAY VALVE/EXCHANG)	●	●		●	●								
136	5691340	PIPE ASS. EXCHANGER/3WV ACC.4E						●							
138	5402010	O RING 22.22x2.62	●	●	●	●	●	●							
139	5206620	CONNECTOR-GAS VALVE INLET	●	●	●	●	●								
139	5637870	VALVE FEED PIPE						●							
140	5671930	GAS VALVE	●	●	●	●	●	●							
147	5116500	LOWER PANEL OUTERCASE						●							
147	5662810	MOUNTING PANEL-HYDRAULICS			●										
147	5680840	SUPPORT FRAME DUOTEC		●		●	●								
147	5694730	TRAVERSE	●												
151	5407650	ELECTRICAL BOX COVER	●	●	●	●	●								
151	5409590	COVER ELECTRICAL BOX						●							
152	5671900	CONTROL PANEL HT 280			●	●	●								
152	5698170	PRINT.CONT.PAN.NOVADENS WESTEN	●	●											
152	5698180	PRINT.CONT.PAN.NOVADENS BOYLER						●							
153	5407660	PANEL - ACCESS	●	●	●	●	●	●							
154	5680190	ELECTRONIC CARD LMU 54 GV SIT						●							
154	5686050	GR.SCHEDA LMU 34 B C/ISTRUZ.	●	●	●	●	●								
156	5669090	P.C.B. DISPLAY SIEM.						●							
157	5678620	DOOR PANEL NOVADENS	●	●											
157	5692850	DOOR PANEL NOVADENS WITH BRAND			●	●	●								
157	5698230	DOOR PANEL ASS.NOVADENS BOYLER						●							
165	5668580	SANITARY INLET PIPE ASSEMBLY						●							
166	8421590	TERMINAL BLOCK	●	●	●	●	●	●							
167	5405340	FUSE HOLDER	●	●	●	●	●	●							

novadens

Pos	Code	Description code	HLH43524970 1.240	HLH43624970 240	HLH43628970 280	HLH43628971 280	HLH43628972 280	HYH43724970 BOYLER 240					To serial number	From serial number	Interchangeable:
168	9950580	FUSE	●	●	●	●	●	●							
169	9951020	GAUGE PRESSURE			●								B741		
169	9951830	PRESSURE GAUGE	●	●		●	●	●							
169	9951830	PRESSURE GAUGE			●									B742	YES
174	5408190	SELECTOR KNOB	●	●	●	●	●								
175	5408200	KNOB	●	●	●	●	●								
190	5404970	WASHER - SEALING G3/8						●							
191	5408970	WASHER - SEALING G1/2						●							
192	5404650	SEALING WASHER G 3/4	●	●	●	●	●	●							
234	5671910	FILLING PIPE ASSEMBLY			●										
234	5689310	FILLING PIPE ASS.LUNA3 CANADA		●		●	●								
240	618480	NON RETURN VALVE GROUP			●										
242	8434830	FLUE SAFETY THERMOSTAT 75øC						●							
242	8435270	NTC SENSOR	●	●	●	●	●								
252	8434550	SELECTOR SWITCH (4 POSITION)	●	●	●	●	●								
259	5692720	BRAND WESTEN	●	●	●	●	●								
280	5207730	GASKET 14,2X18X1,5		●	●	●	●								
284	5405990	DRIVE PIN	●	●	●	●	●								
285	5409600	TERMINAL BOARD COVER						●							
310	5641850	DIFFERENTIAL PRESSURE SWITCH						●							
314	8510580	LEAD - SENSING ELECTRODE						●							
316	8380610	CLIP-MICROSWITCH RETAINING						●							
336	8380680	CLIP-RETAINING	●	●	●	●	●	●							
337	5647340	MOTOR-3 WAY VALVE	●		●	●		●							
337	5694580	3 WAY VALVE MOTOR		●			●								
340	9951690	PRESSURE SWITCH	●	●	●	●	●								
342	5641800	MICRO SWITCH WITH CABLE						●							
356	5634820	PIN GUIDE CONNECTOR ASSEMBLY						●							
357	8380600	SPRING						●							
358	5634830	PADDLE ASSEMBLY						●							
365	5106530	LOWER SUPPORT						●							
371	5666580	FILLING PIPE ASSEMBLY D.8						●							
373	5109080	FILTER-CENTRAL HEATING						●							
374	5212030	PLUG FILTER M30						●							
375	5663030	BY-PASS PIPE ASSEMBLY						●							
379	5206120	CONNECTING ELEMENT						●							
380	5400620	O-RING 4,47 x 1,78						●							
381	5209830	CONTROL BOX'S PIN						●							
382	8511130	FLAME SENSING CABLE	●	●	●	●	●	●							
408	5211790	EXCHANGER FLANGE						●							
408	5212900	COMB.CHAMBER UPPER COVER	●	●	●	●	●								
409	5409090	BURNER GASKET						●							

novadens

Pos	Code	Description code	HLH43524397 0 1.240	HLH43624397 0 240	HLH43628397 0 280	HLH43628397 1 280	HLH43628397 2 280	HYH43724397 0 BOYLER 240					To serial number	From serial number	Interchangeable:
409	5410740	BURNER GASKET	●	●	●	●	●								
411	5409110	FLAME SENSING ELEC.GASKET	●	●	●	●	●	●							
415	5677920	CONDENSE DRAIN TRAP ASSY						●							
415	5682350	TRAP ASS. BASIC	●	●	●	●	●								
419	5409080	GASKET FLANGE/EXCHANGER						●							
419	5411000	COMB.CHAMBER GASKET	●	●	●	●	●								
421	5408270	O-RING 11,91 X 2,62 NBR	●	●	●	●									
423	5210410	GAS VALVE CONNECTOR	●	●	●	●	●	●							
425	5411420	FAN GASKET	●	●	●	●	●	●							
428	5409290	GASKET	●	●	●	●	●	●							
432	5410420	WASHER DIA 60 OUTLET BEND	●	●	●	●	●	●							
434	5682330	FLUE COLLECTOR NUVOLA HT						●							
435	5407550	WASHER DIA100 OUTER ADAPT SEAL	●	●	●	●	●	●							
438	5410480	GASKET						●							
443	5212090	SUPPORT OVERHEAT FLUE STAT						●							
445	5409310	SYPHON PIPE						●							
445	5410980	SILICONE PIPE	●	●	●	●	●								
448	5209230	RETAINING VALVE CONNECTION						●							
449	5640030	RETAINING VALVE						●							
458	5409350	OR 2,62X58,42						●							
459	5411610	DISCHARGE PIPE	●	●	●	●	●	●							
493	612130	FILLING KNOB ASSEMBLY		●	●	●	●								
496	400020	O-RING	●		●	●									
498	400030	O-RING			●	●									
510	600760	DHW PADDLE ASSEMBLY	●		●	●									
511	5404600	O.R. 17,86x2,62	●	●	●	●	●	●							
514	5663010	PUMP FILTER CONNEC. ASS.						●							
516	5210670	STUD-FRONT PANEL	●	●	●	●	●								
518	5107180	PIN-HINGED FACIA PANEL 28/28I	●	●	●	●	●								
525	616800	CABLE ASS.+ACC.NUVOLA HT						●							
525	8435220	ANSTOSS-ZAG 2V IGNITOR						●							
525	8435260	IGNITOR	●	●	●	●	●								
600	5112530	SPRING		●	●	●	●								
601	5408560	O-RING 8,73x1,78	●	●	●	●	●	●							
607	8434930	CONTACT SENSOR						●							
621	5663120	FILLING PIPE D.8						●							
624	8435280	SENSOR HALL EFFECT		●	●	●	●								
631	5663310	AIR VENT PIPE ASSEMBLY						●							
631	5685240	AIR VENT PIPE - E125	●	●	●	●	●								
647	5652730	AUTO AIR VENT	●	●	●	●	●	●							
671	5646780	DRAINING TAP G 1/2 (COPPER)						●							
672	5668560	PIPE						●							

novadens

Pos	Code	Description code	HLH43524397 0 1.240	HLH43624397 0 240	HLH43628397 0 280	HLH43628397 1 280	HLH43628397 2 280	HYH43724397 0 BOYLER 240					To serial number	From serial number	Interchangeable:
673	5410030	PIPE EPDM 15X23 L=280						●							
673	5412190	PIPE CONNECTION SYPHO	●	●	●	●	●								
674	5409390	GASKET EXCHANGER 4 EL.						●							
675	8380780	FIXING SPRING FOR EXCHANGER						●							
677	5212010	4 ELEMENTS CONNECTOR HT 1.120						●							
677	5212920	EXTENTION 4 EL.		●											
677	5212930	EXTENSION	●		●	●	●								
678	5665130	AIR/GAS COVER ASSEMBLY						●							
678	5672130	AIR/GAS COVER ASSY	●	●	●	●	●								
679	8510980	CABLE EARTH/IGNITOR						●							
679	8511150	EARTH/IGNITOR CABLE	●	●	●	●	●								
680	5409250	GROMMET-PIPE ASSY. D.15	●	●	●	●	●	●							
681	5409120	PROTECTION CAP-ELECTRODE	●	●	●	●	●	●							
682	5211800	SIGHT GLASS	●	●	●	●	●	●							
686	5663020	BY-PASS PLUG ASSEMBLY	●					●							
708	5410970	GASKET WITH DOUBLE LIP	●	●	●	●	●								
709	8423160	TERMINAL BLOCK	●	●	●	●	●								
710	5411030	GASKET	●	●	●	●	●								
715	5402700	ORING 15,60X1,78		●			●								
732	620210	SPRING ASS.						●							
738	620490	ASS.GR./ORING/SPRING 12.0059	●		●	●									
999	5663850	WIRING THERMOSTAT PREDISP.						●							
999	8414620	POWER CABLE	●	●	●	●	●	●							
999	8418860	PLUG - PCB	●	●	●	●	●								
999	8419950	WIRING PCB INPUT						●							
999	8419990	DISPLAY P.C.B. WIRING						●							
999	8510530	CABLE/FUN TH./ACC.						●							
999	8510540	FAN CHECK WIRING						●							
999	8510550	WIRING SENS/PUMP PRESSOSTAT						●							
999	8510560	3 WAY VALVE CABLE						●							
999	8511160	WIRING HARNESS-FAN/IGNITOR			●	●	●								
999	8511170	WIRING HARNESS			●	●	●								
999	8511180	WIRING HARNESS-SELECT SWIT			●	●	●								
999	8511190	DHW PRIORITY/SENSOR WIRING			●	●	●								
999	8511210	WIRING HARNESS-CONNECTOR			●	●	●								
999	8511220	EARTH CABLE - PCB			●	●	●								
999	8511230	EARTH CABLE			●	●	●								
999	8511330	DHW PRIORITY/ SENSOR WIRING	●												
999	8511550	GAS VALVE WIRING						●							
999	8511610	WIRING HARNESS	●	●	●	●	●								

Tab 278

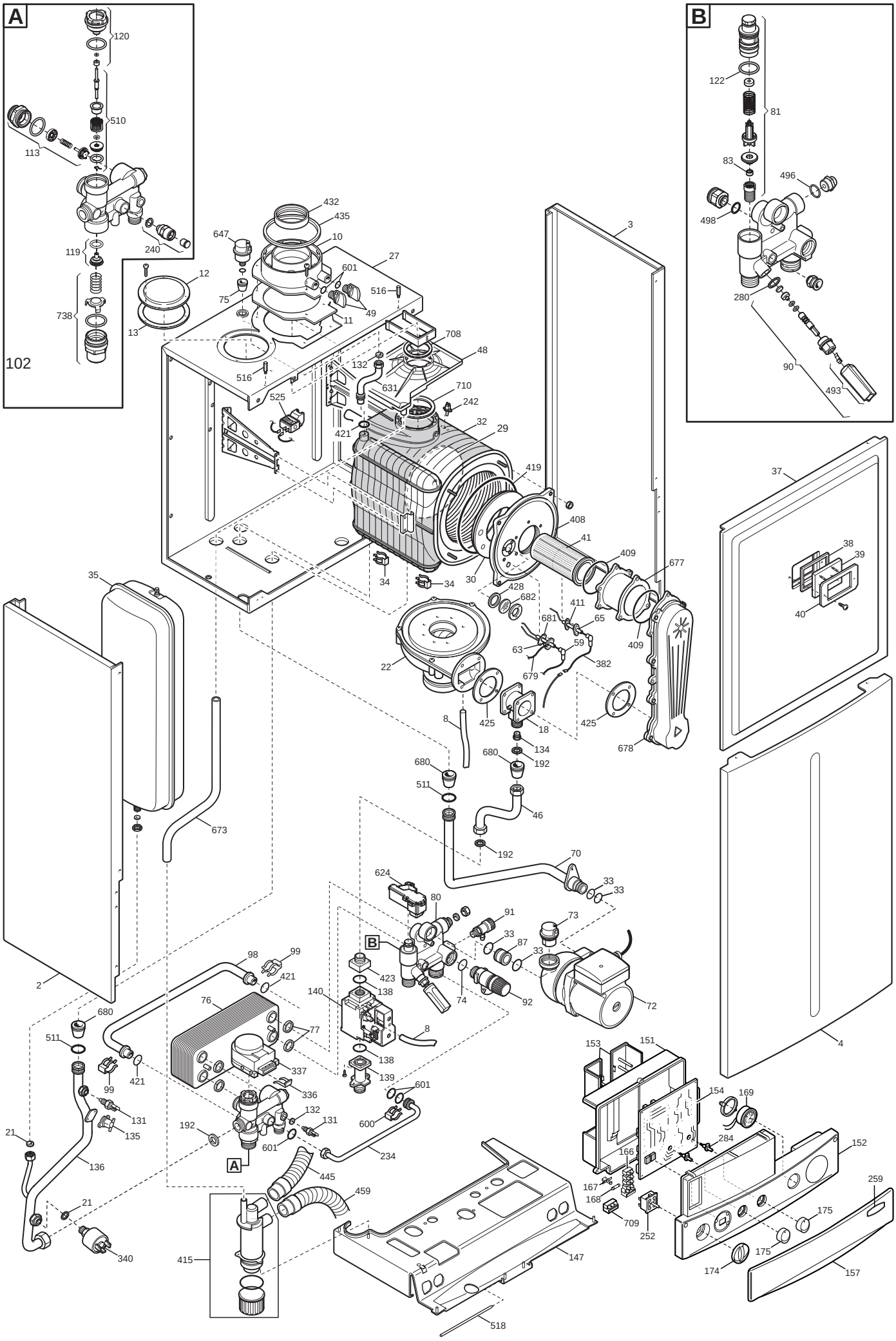
A
B
102
120
510
113
119
240
738
12
13
647
75
432
435
10
27
601
516
49
11
708
48
132
631
710
242
525
421
32
29
419
408
41
409
677
3
37
38
39
40
35
34
30
428
682
681
411
65
59
63
679
382
22
425
18
134
192
678
8
680
511
46
673
70
624
80
91
73
33
87
B
423
138
140
74
92
72
98
99
421
76
77
337
336
139
601
600
234
2
4
153
151
154
169
284
166
167
168
709
252
152
259
175
174
157
147
518
445
459
415
131
135
136
21
340
A

Tab 336

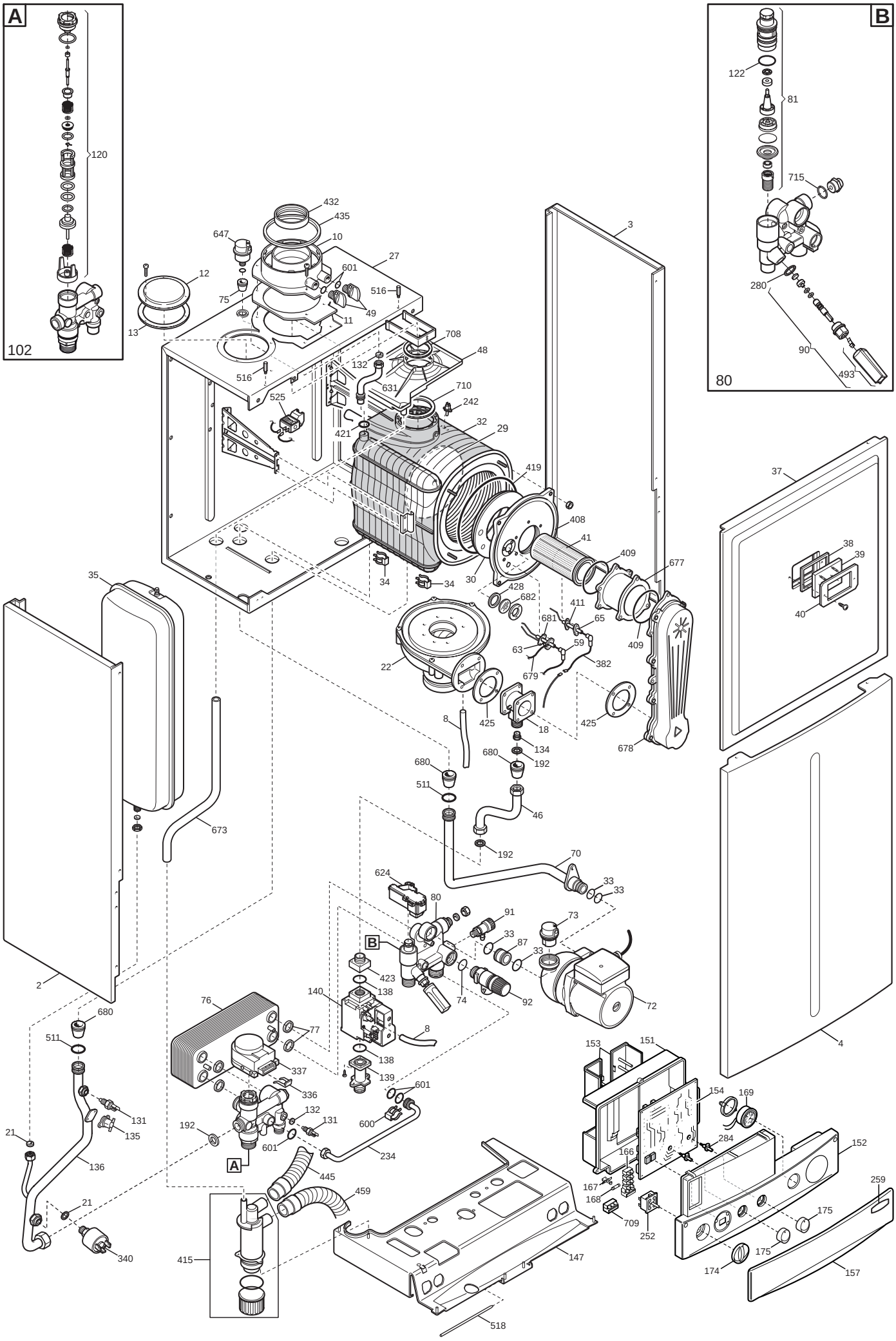
A
120
102
B
122
81
715
280
90
493
80
432
435
10
647
27
601
12
75
516
49
11
13
708
48
132
631
710
242
525
32
29
421
419
3
37
38
39
40
408
41
409
677
35
34
34
30
428
682
411
65
681
59
63
409
382
679
22
425
425
8
18
134
192
678
680
680
511
46
673
192
70
624
33
33
80
91
73
B
33
87
33
423
138
74
92
72
140
76
8
77
2
680
511
138
337
139
601
336
131
132
131
600
135
192
601
234
21
136
A
445
459
21
340
415
147
518
153
151
154
169
284
152
166
167
168
709
252
259
175
175
174
157
4

Tab 363

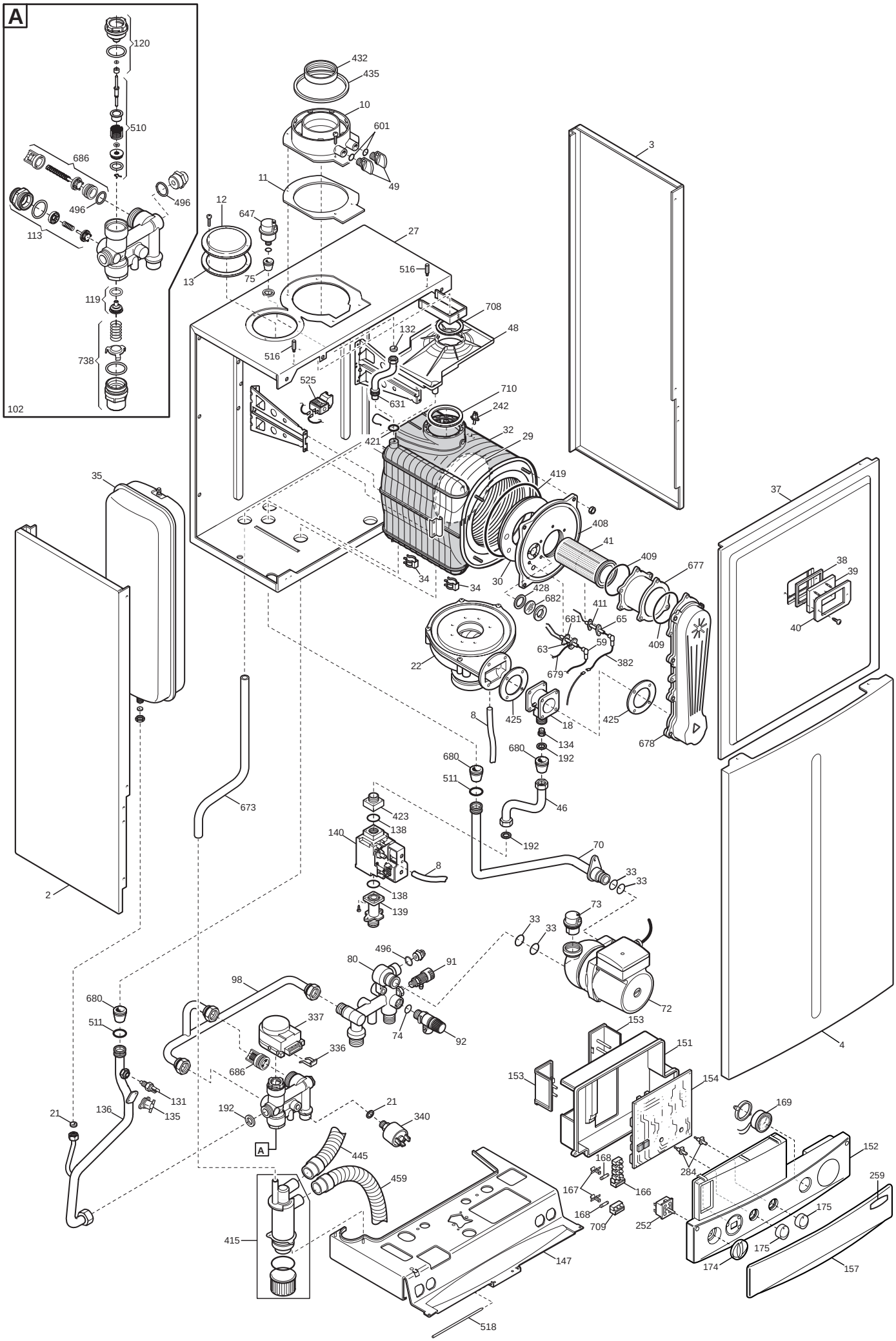
A
120
510
686
496
496
113
119
738
102
432
435
10
601
49
3
11
12
647
27
13
75
516
708
132
48
516
525
631
710
242
32
29
421
419
35
37
408
41
409
677
38
39
34
34
30
428
682
411
65
681
59
40
409
63
22
679
382
425
8
18
425
134
678
680
192
680
511
46
673
423
138
140
192
70
8
33
33
2
138
139
73
33
33
496
80
91
98
72
680
337
74
92
153
511
336
151
4
686
153
154
131
136
135
192
21
21
340
169
A
445
168
152
284
459
167
166
259
168
709
252
175
415
175
147
174
157
518

Tab 364

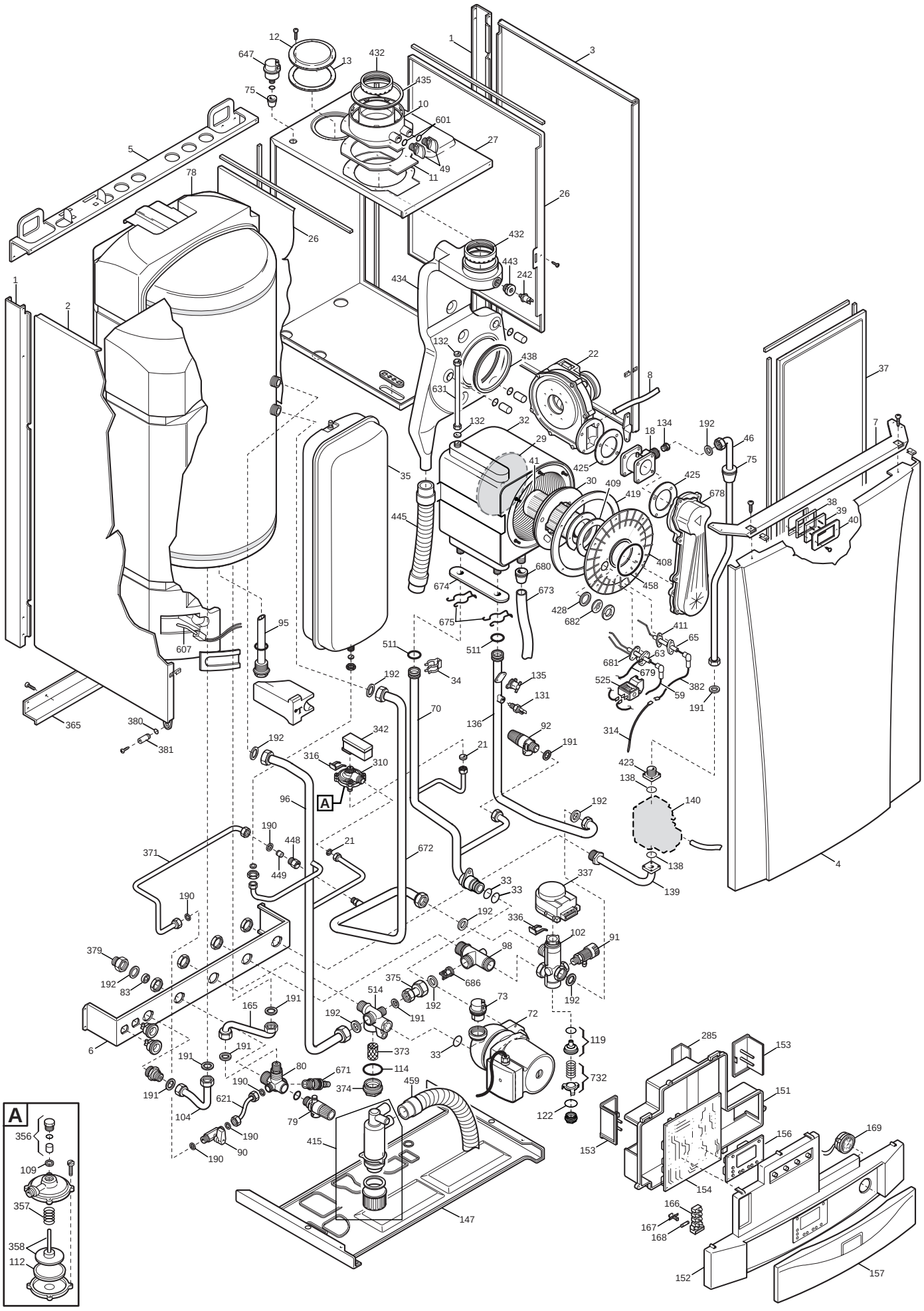
1
2
3
4
5
6
7
8
10
11
12
13
18
21
22
26
27
29
30
32
33
34
35
37
38
39
40
41
46
49
59
63
65
70
73
75
78
80
83
90
91
95
96
98
102
104
109
112
114
119
122
131
132
134
135
136
138
139
140
147
151
152
153
154
156
157
165
166
167
168
169
191
192
242
285
310
314
316
336
337
342
365
371
373
374
375
379
380
381
382
408
409
411
419
423
425
428
432
434
435
438
443
445
448
449
458
459
514
511
525
601
607
621
631
647
671
672
673
674
675
678
679
680
681
682
686
732
415
A

BAXI S.p.A.
Via Trozzetti, 20
36061 BASSANO DEL GRAPPA (VI) ITALY
Tel. +390424517111 Telefax +390424517379
Web site: www.baxi.it e-mail: service@baxi.it